StarLine i96CAN Car immobilizer connection diagram

The developer and manufacturer, StarLine NPO, reserves the right to make technical improvements not shown in this diagram. Information on updates, current versions of operation and installation manuals are available on the website help.starline.ru

Information on connection to different cars CAN bus is available at can.starline.ru website

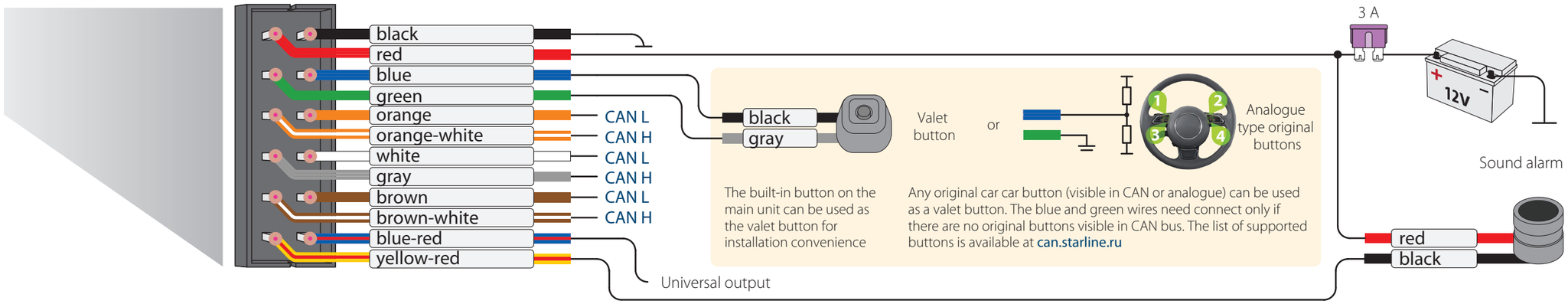

Diagram of EC-1 sensor connection to i96CAN v2

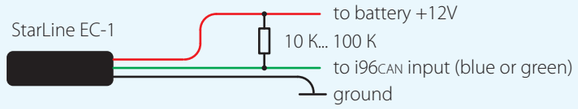

Variant of Valet (service) button connection to i96CAN v2

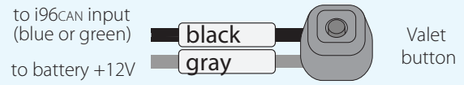

StarLine R6 wireless under-hood relay module connection diagram

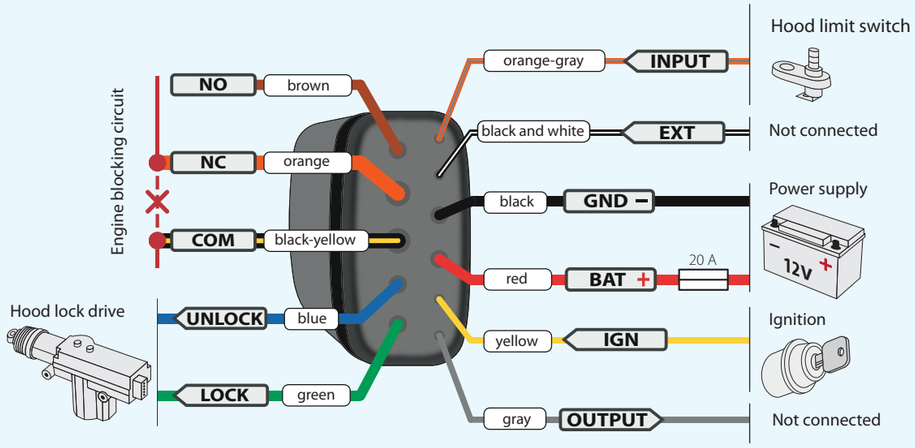

StarLine R4 code relay connection diagram

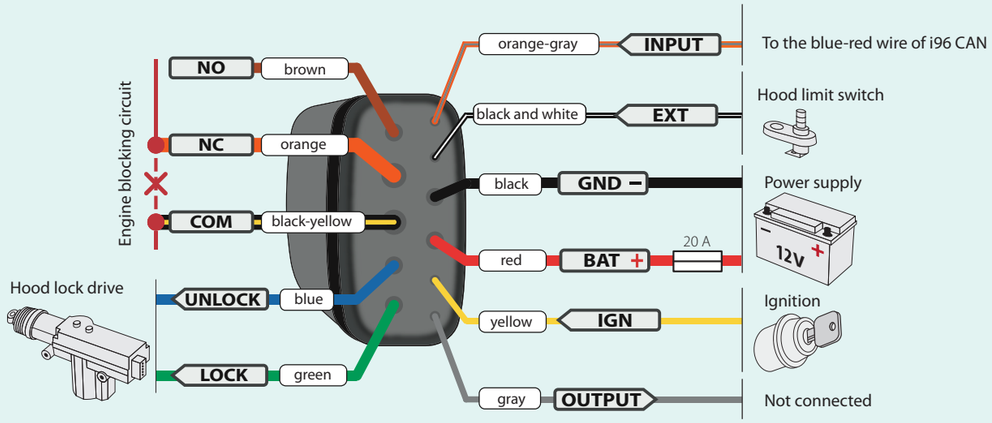

OBD-II connector protection

StarLine i96CAN protects from unauthorized access to the car diagnostic bus. Two connection variants are possible depending on a car.

1. For a car with one CAN bus

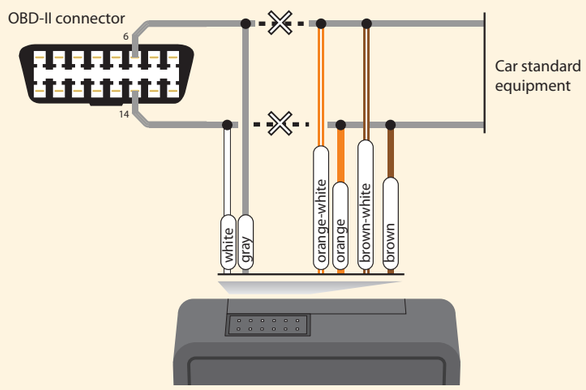

2. For a car with several CAN buses, one of which is single wire

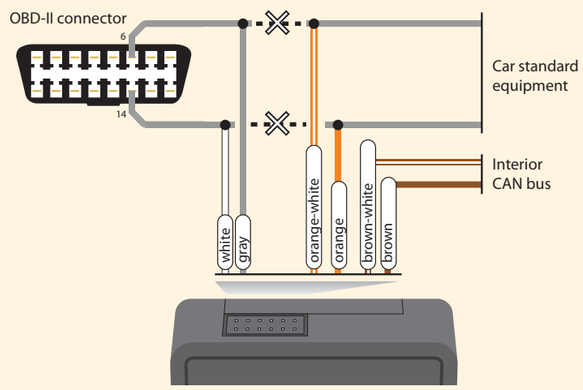

Find more detailed information about OBD-II socket protection at can.starline.ru website

Regular car blocking relay connection diagram

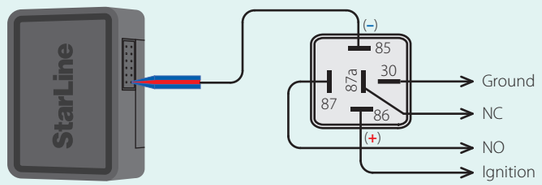

Setup blue-red output to an auxiliary blocking relay control

StarLine car blocking relay connection diagram

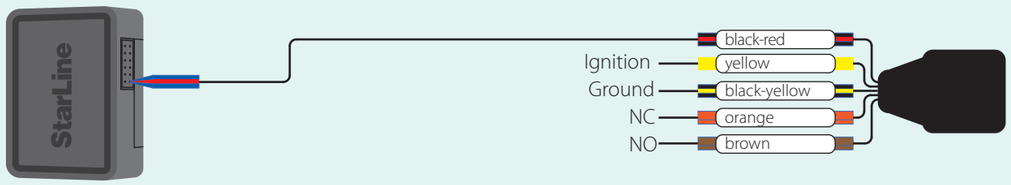

StarLine i96CAN Car immobilizer connection diagram

To set up and update the main unit firmware use StarLine Master software (available at **help.starline.ru/slm**) with connecting the immobilizer to computer via USB. Then select the car make and model in StarLine Master program. Use StarLine BLE programmer to update the wireless tags and StarLine R6 under-hood unit firmware.

ATTENTION!
The tags included in the delivery set are already registered in the immobilizer and are in the transport mode, i.e. off. Pressing of the tag button in this mode will be indicated by green and red flashes of the built-in LED. Prior to operation, press the tag button several times until the flash color changes to green to switch to the normal operating mode.

ATTENTION!
If tags are not included into the set, so the immobilizer will be initially in "Emergency disarm mode" (long sound signal follows after ignition is turned On). Immobilizer will return to a regular mode when detects a registered tag or the owner authorization code is entered.

Components registration

ATTENTION!
At registration of new tags and smartphones all previous tags and smartphones will be deleted from memory.
It will be necessary to register them again.
Up to 5 devices total can be registered in the immobilizer.

Entry to the device registration mode

1. Disarm the immobilizer with a tag presence or enter the emergency disarm code (see the quick user's manual).
2. Switch ignition On and press the valet button 7 times.
3. Switch ignition Off and On. 7 sound signals will follow, confirming entry into "Registration" mode.

Tag registration

4. Remove the batteries from the tags.
5. Press the tag button and insert the battery back. The tag LED will light up red.
6. Release the button, a series of red flashes will follow.
7. In 10 seconds, successful registration will be confirmed by a green flash and 2 sound signals. If the tag was not registered, the LED will light up red.
8. Repeat steps 4-6 for the remaining tags.

Smartphone registration

9. Register a smartphone with use of free StarLine Key mobile App.

Exit from the device registration mode

10. Switch ignition Off to exit the "Registration" mode. Sound signals will follow, the number of signals will match the total number of registered tags and smartphones.

Programming the owner authorization code

It is used for owner authorization by means of car OEM buttons.

1. Enter the emergency disarm code (see the quick user's manual).
   If connection with registered tag or smartphone is established - this step can be omitted.
2. Switch ignition On.
3. Press the valet button 5 times.
4. Switch ignition Off and On.
5. 5 sound signals will follow, confirming entry into "Authorization code change" mode.
6. Enter the owner authorization code using car OEM buttons with pressing interval no more than 3 seconds. Hold the button until a confirming sound signal is heard. The owner authorization code consists of a code sequence containing from 3 to 10 pressings of OEM buttons.
   The list of supported OEM buttons is available at can.starline.ru
7. If a sound signal does not follow after pressing of OEM button, so this button is not supported for this car.
8. In 3 seconds after the code entry 2 short sound signals of the buzzer will follow, confirming the code successful registration.
9. Enter the owner authorization code again.
10. If the code is entered correctly, 2 short sound signals will follow. If the code is entered incorrectly, a long sound signal will follow, in this case repeat steps 6-8.
11. Switch ignition Off to exit the "Authorization code change" mode.

Registration of StarLine R4

If StarLine R4 is purchased separately, it must be registered to the immobilizer memory.
Connect StarLine R4 in compliance with the diagram (see the reverse side).

1. Set the immobilizer to the "Security off" mode.
2. Switch ignition Off if it is On.
3. Interconnect the OUTPUT and INPUT wires of the code relay.
4. Enter the emergency disarm code (see the quick user's manual).
   If connection with registered tag or smartphone is established, this step can be omitted.
5. Switch ignition On and press the valet button 7 times.
6. Switch ignition Off and On. 7 sound signals will follow, confirming entry into "Registration" mode.
7. Successful registration will be confirmed by a short activation of StarLine R4 built-in relay.
8. Switch ignition Off and disconnect OUTPUT and INPUT wires.

Registration of StarLine R6

If StarLine R6 is purchased separately, it must be registered in the immobilizer memory:

1. Switch ignition Off if it is On.
2. Disconnect the BAT, OUTPUT and INPUT wires from the car circuits.
3. Enter the emergency disarm code (see the quick user's manual).
   If connection with registered tag or smartphone is established, this step can be omitted.
4. Switch ignition On and press the valet button 7 times.
5. Switch ignition Off and On. 7 sound signals will follow, confirming entry into "Registration" mode.
6. Interconnect the OUTPUT and INPUT wires of the under-hood unit.
7. Connect power supply BAT and GND wires.
8. In 10 seconds successful registration will be confirmed by 2 short sound signals.
9. Disconnect the BAT wire from the car circuits, then disconnect the OUTPUT and INPUT wires.
10. Switch ignition Off and check the unit operation.

General installation requirements

Only qualified and trained personnel is allowed to install StarLine security equipment.

The system is intended for installation into the cars with 12V on-board voltage.

Before mounting make sure that the car circuits, to which StarLine is to be connected, are operable and there are no car equipment errors are detected.

Installation should be done in compliance to the connection diagram.

The "ground" wire should be connected first with use of original "ground" fixing screw.

Mount the harness in the most possible distance from electric interference sources: ignition coils, high voltage ignition wires etc.

Make sure that harness are mounted away from movable parts of vehicle – pedals, steering shaft etc.

Connect the harness to the main unit of immobilizer only after all wires are connected to the corresponding car circuits.

Authorization with smartphone

To use a smartphone as a tag, download StarLine Key mobile App for free and register a smartphone into immobilizer memory. The smartphone shall support BLE protocol 4.2 and above version.

The application allows using a smartphone instead of the owner authorization wireless tag, as well as switching the immobilizer to the valet mode while a car maintenance.

Bluetooth should be activated in your smartphone when App operation.

The application is available for the most popular mobile platforms iOS